ROBO SUPPORT

Quality Of Robots And Machine Solutions

SAFETY FENCE
SAFETY FIRST

About Us

บริการให้คำปรึกษา ออกแบบ และติดตั้ง Safety Fence รั้วป้องกันอันตรายจากเครื่องจักร เสากันชน ราวกั้น โดยทีมงานที่เชี่ยวชาญ และประสบการณ์ตรง

Suscribe Now

www.thaisupport.co.th

02 101 9602
02 312 6878

PANEL STD.

The 60x40 panel is a robust machine guard panel with a 25x25mm. frame. All horizontal wires are welded into the frame and the vertical wires are welded to the crossing tubes, creating a stable, strong and impact resistant panel.

The narrow mesh size 20x100mm. allows a safety distance of 120mm. from the hazard.

Standard panels are avilable in 8 widhts, from 200mm. to 1,500mm. to fit system heights of either 1,500mm. , 1,800mm. 2,000mm. or 2,200mm. ROBO's Yellow-Black standard colour provides the best visibility throughout the hazard zone, but panels can be supplied in any colour of your choice.

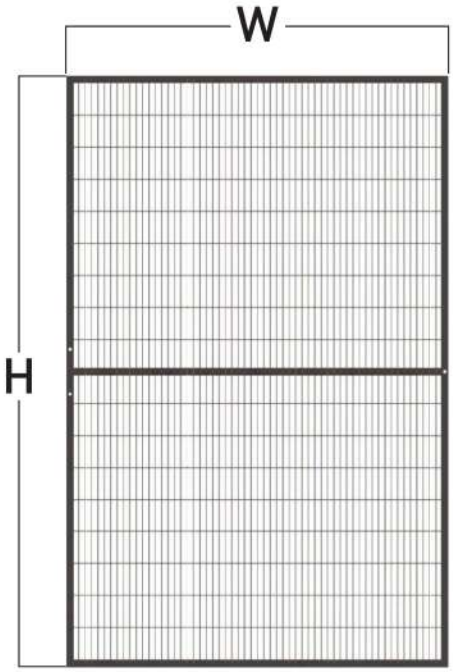

How to Order

H □□ □□□ W □□ YB

Hight (mm.)
22=2050
20=1850
18=1650
15=1350

Wire Mesh Type
210=20x100
55=50x50
53=50x30
44=40x40

Width (mm.)
02=200
03=300
05=500
07=700
08=800
10=1000
12=1200
15=1500

Color
Y=Yellow
B=Black

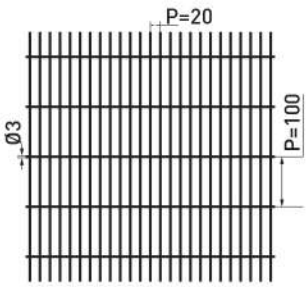

Type 20x100xDai. 3

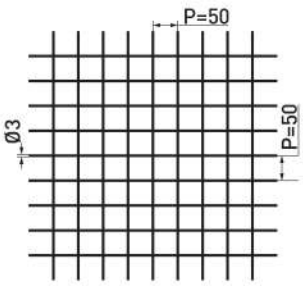

Type 50x50xDai. 3

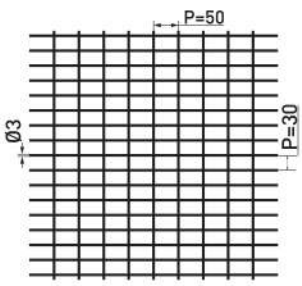

Type 50x30xDai. 3

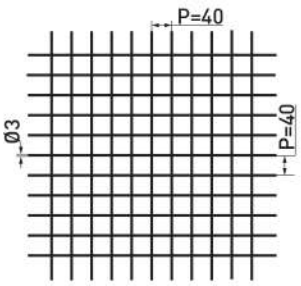

Type 40x40xDai. 3

Remark : Code : S40168AN (Y) RAL1021 | Code : S10076BN (B) RAL9005

Copyright @ Thaisupport Machinery Co., Ltd. 2022. All right reserved.

IMAGE

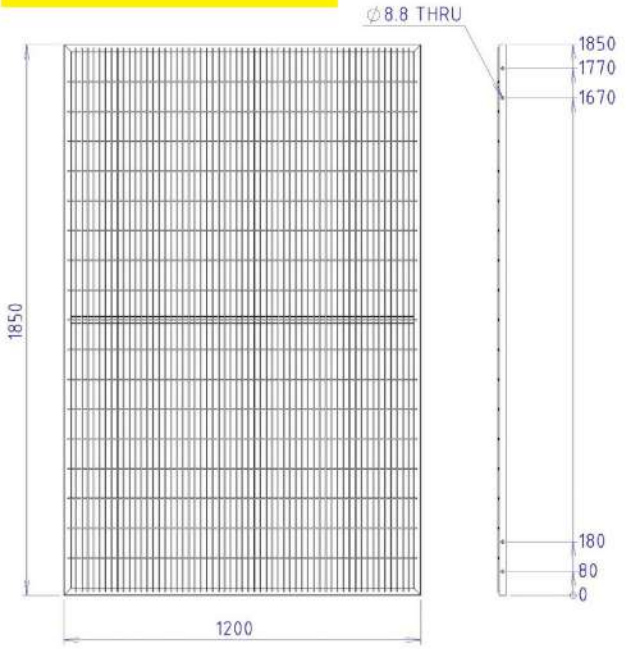

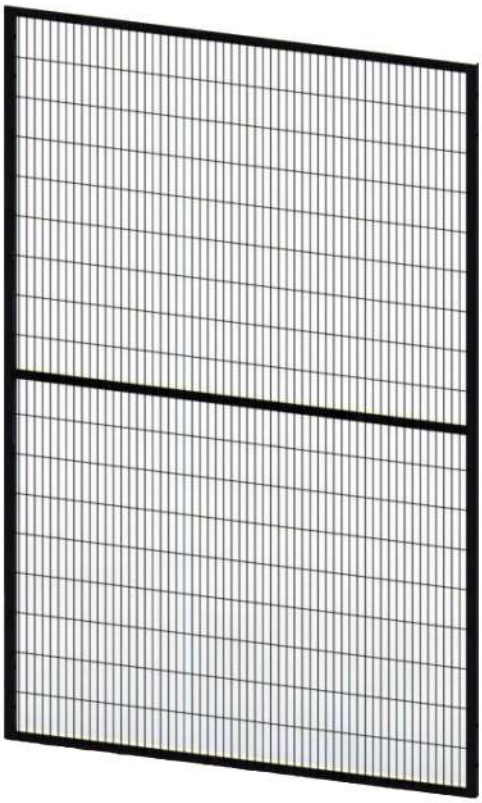

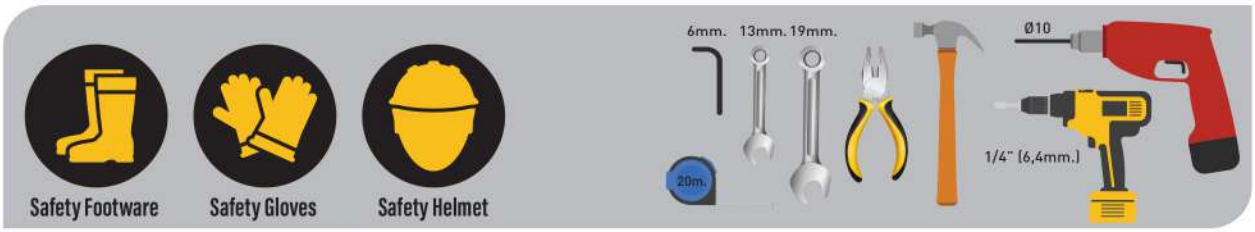

ACCESSORIES

Kit Hinge 36904990

60x40

M8x12
M8x35

Kit Clamp

60x40

M8x12
M8x28

Remark : Code : S40168AN (Y) RAL1021 | Code : S10076BN (B) RAL9005

Copyright @ Thaisupport Machinery Co., Ltd. 2022. All right reserved.

POLE 40x60

The 60x40mm. pole is assembled together with the Smart Fix, Rapid Fix and Safe Fix System. It's available in three heights as standard : 1,500mm. , 1,800mm. 2,000mm. and 2,200mm.

The poles can be cut to any required height and also extended, using the extension bracket or Smart Splice.

The welded base results in a stable and robust construction.

FACTS

ART. NO	COMPONENTS	MATERIAL
P15-4060Y	Pole 60x40x1500	SS400
P18-4060Y	Pole 60x40x1800	SS400
P20-4060Y	Pole 60x40x2000	SS400
P22-4060Y	Pole 60x40x2200	SS400

Copyright @ Thaisupport Machinery Co., Ltd. 2022. All right reserved.

ASSEMBLY INSTRUCTION

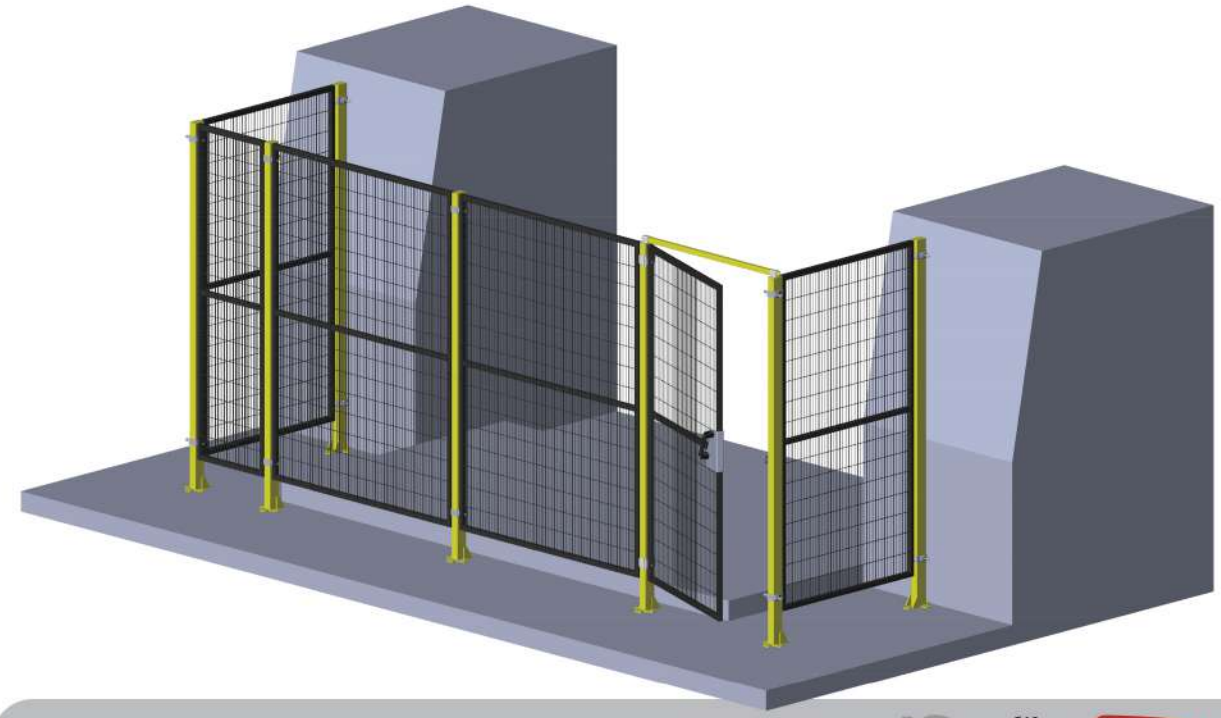

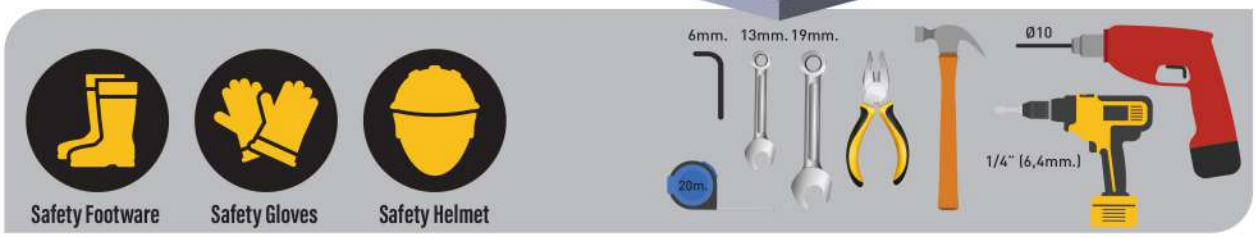

Kit bracket SMF

60x40

Kit SMF T-Crossing Expander

M8x12, M8x30

Quickdrilling screw

M10x80, 4.2x13

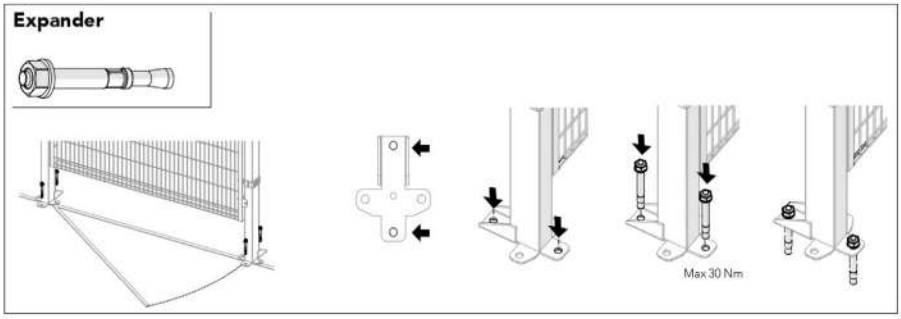

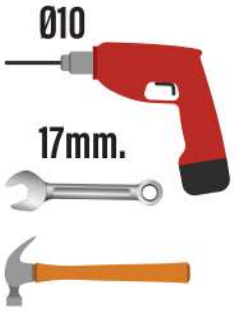

Copyright @ Thaisupport Machinery Co., Ltd. 2022. All right reserved.

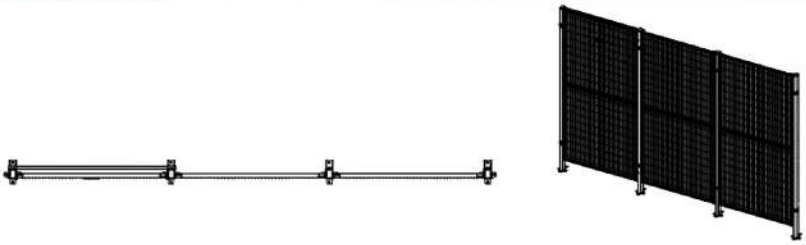

Kit Bracket SMF

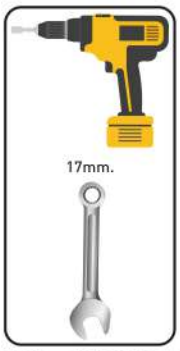

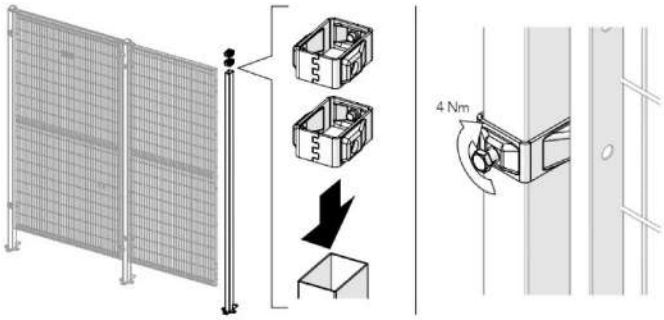

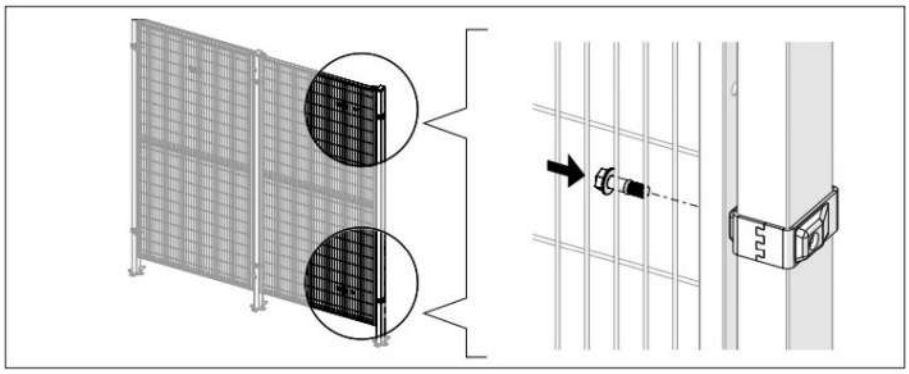

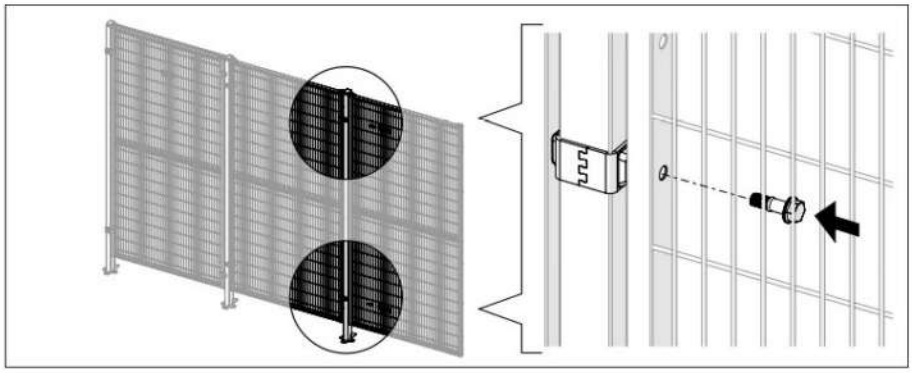

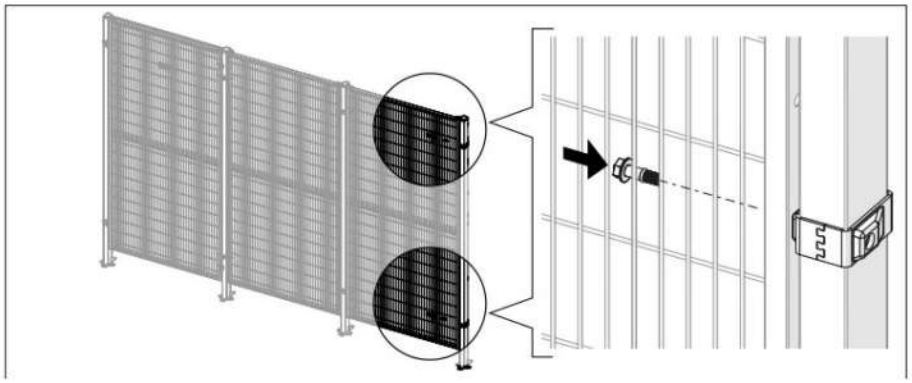

Copyright @ Thaisupport Machinery Co., Ltd. 2022. All right reserved.

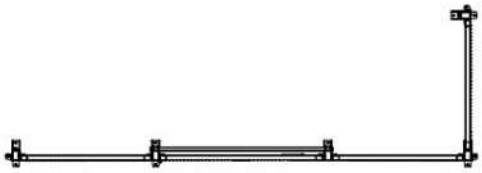

Kit Bracket SMF

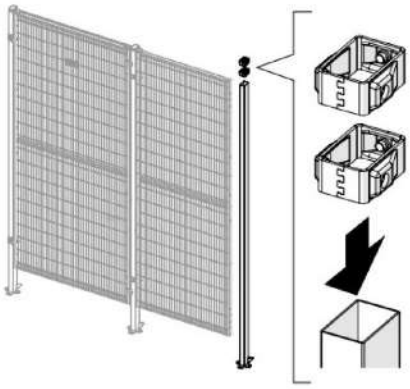

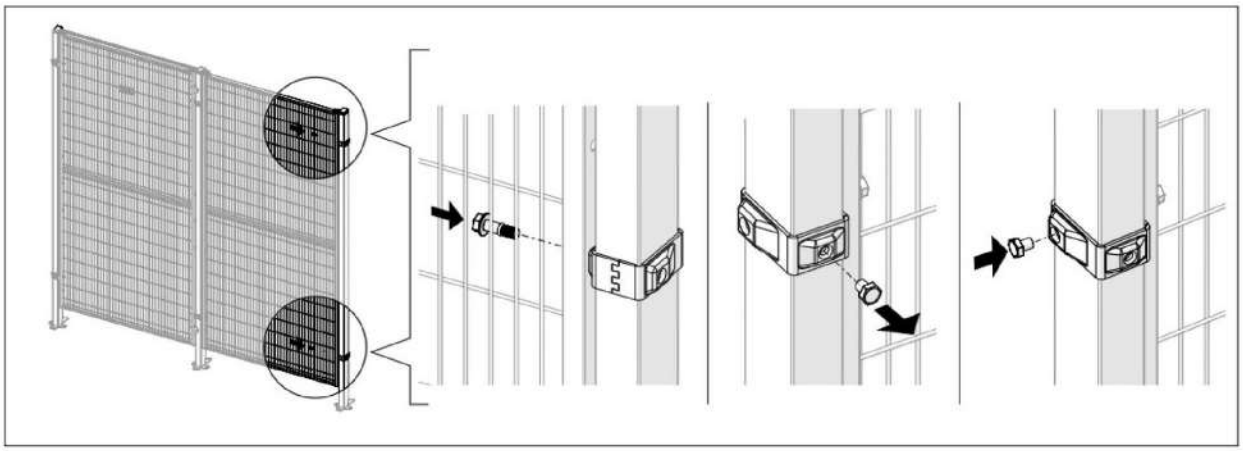

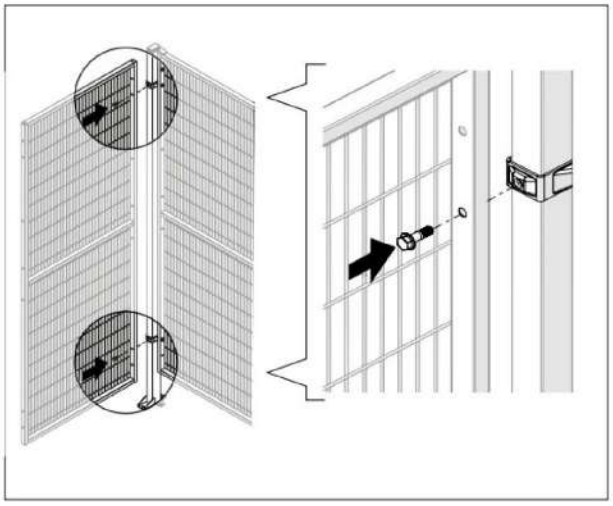

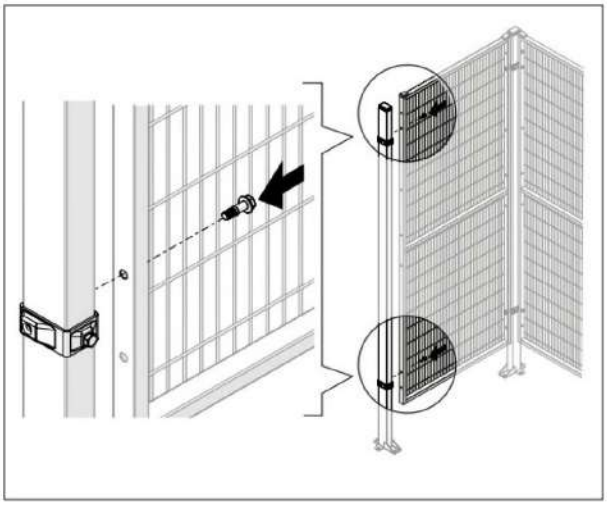

Copyright @ Thaisupport Machinery Co., Ltd. 2022. All right reserved.

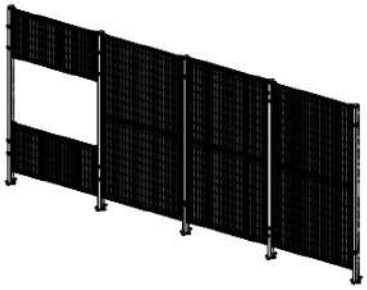

Kit Bracket SMF

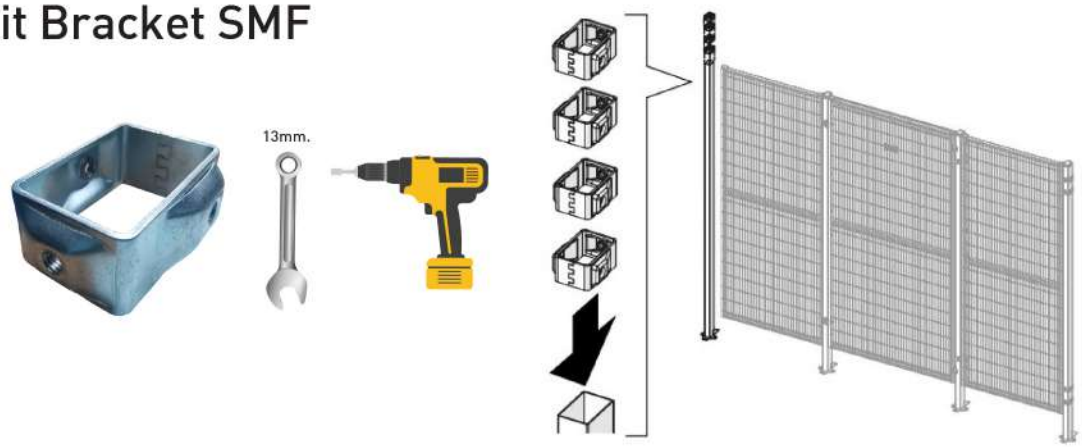

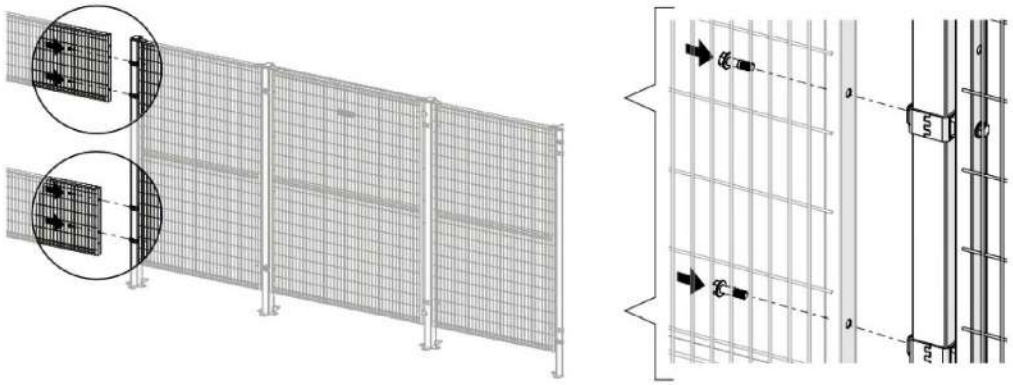

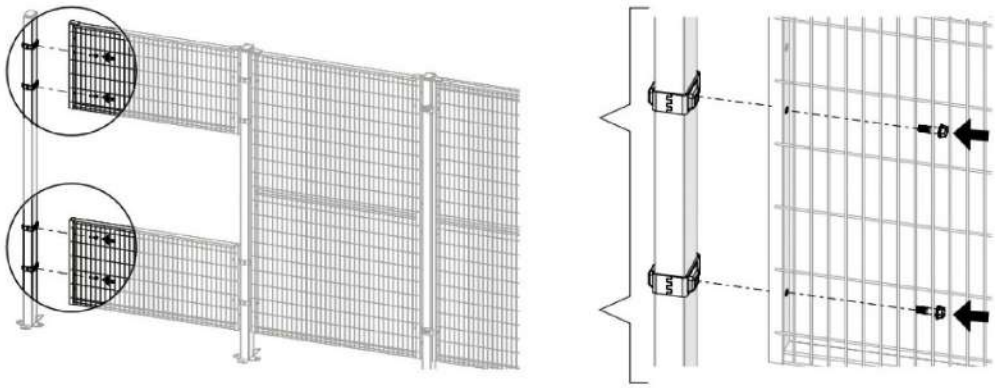

Copyright @ Thaisupport Machinery Co., Ltd. 2022. All right reserved.

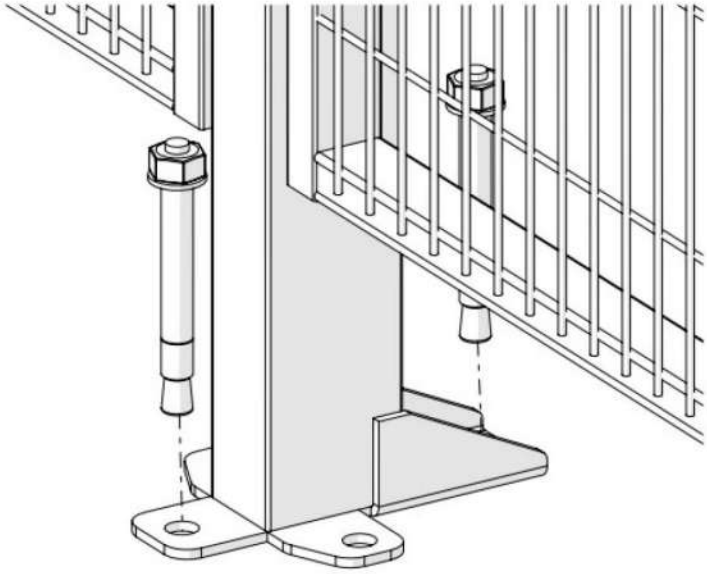

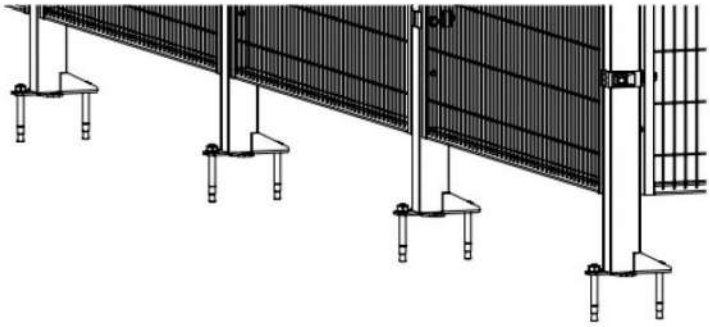

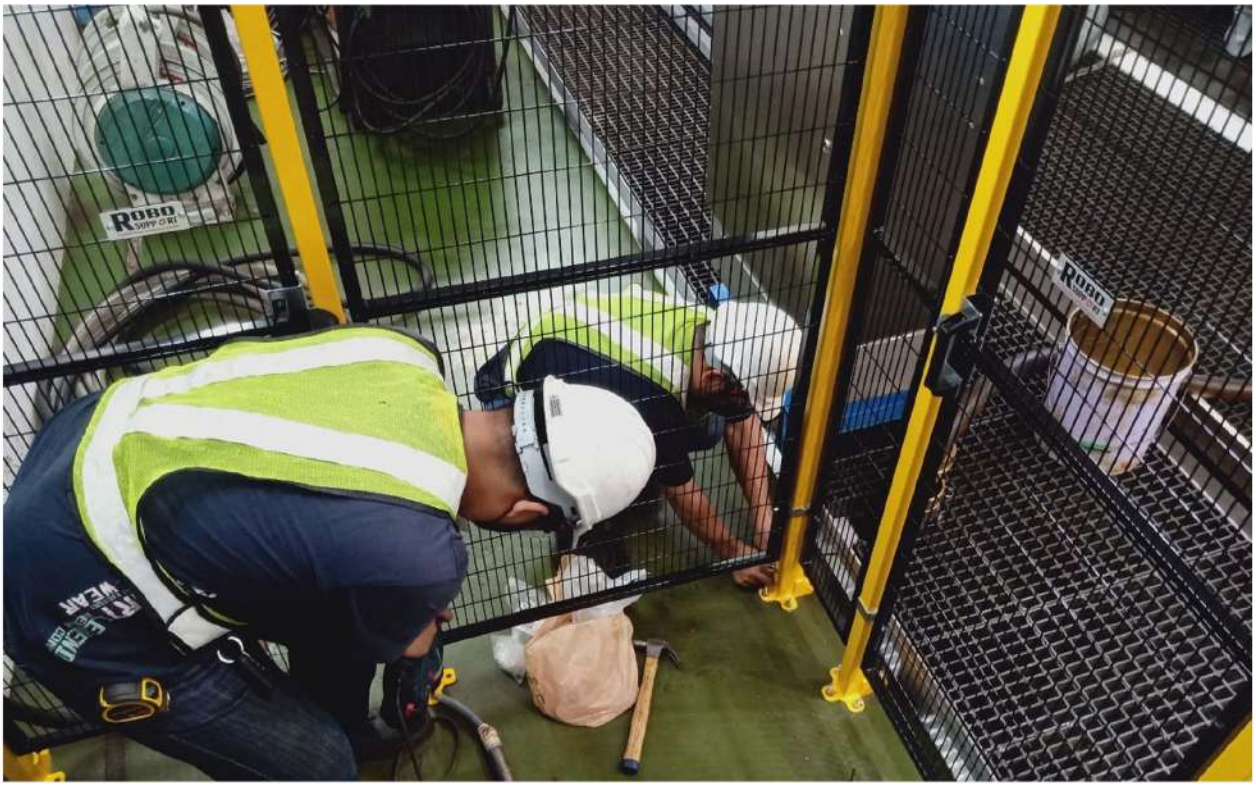

Copyright @ Thaisupport Machinery Co., Ltd. 2022. All right reserved.

SINGLE SWING DOOR

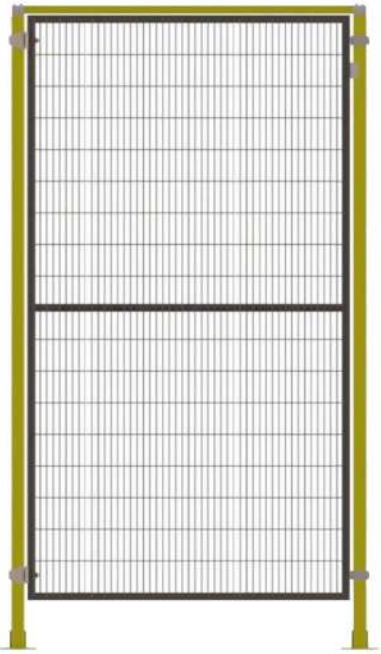

Standard swing door, you can chose any standard panel height. 1850 mm. or 1305 mm. and above , with can be selected from 600 mm. You can also order extra wide panels to create the desired door size.

The single hinged door can be ordered pre-assembled with lock and safety switch from the factory, or as separate panels, posts, and door kit for assembly on site.

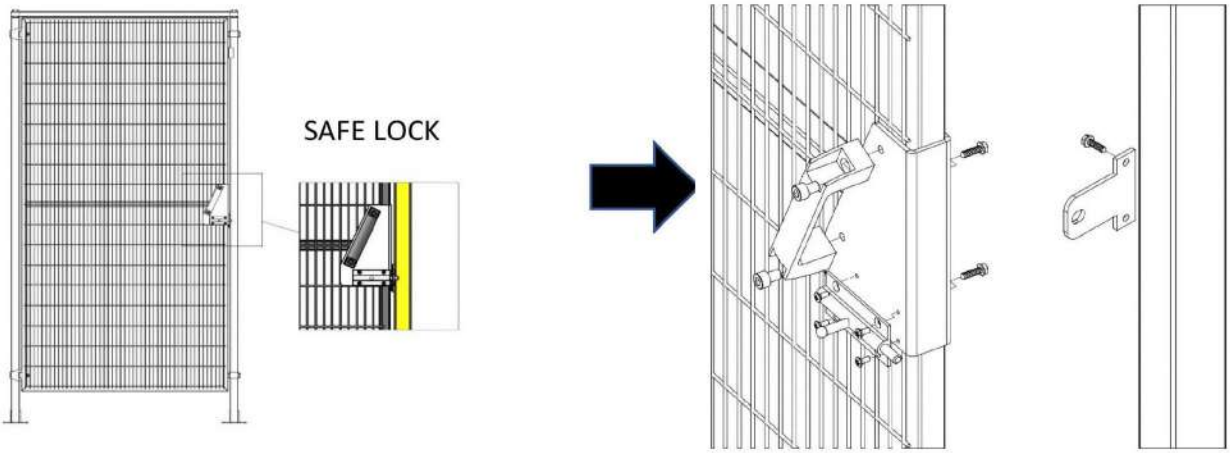

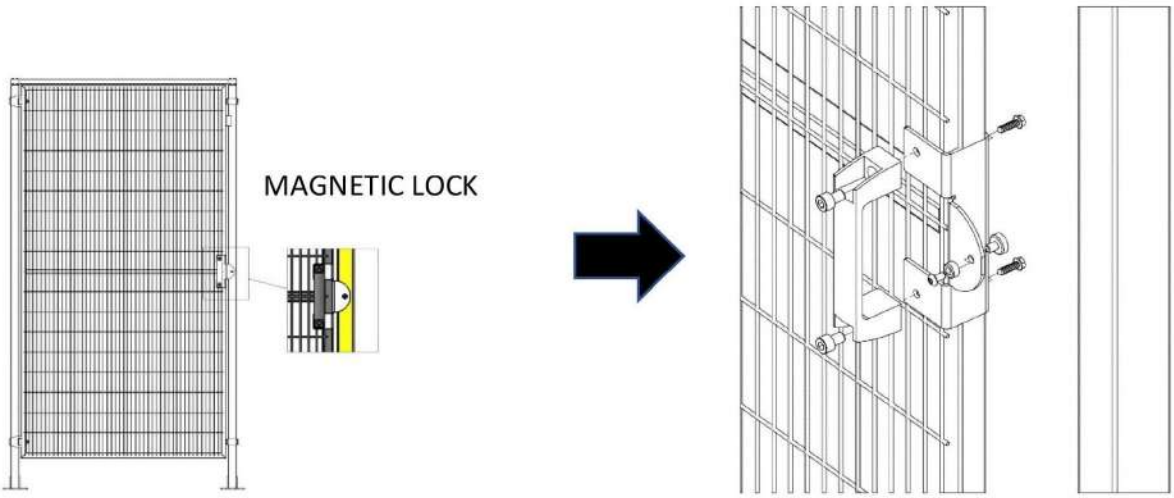

Copyright @ Thaisupport Machinery Co., Ltd. 2022. All right reserved.

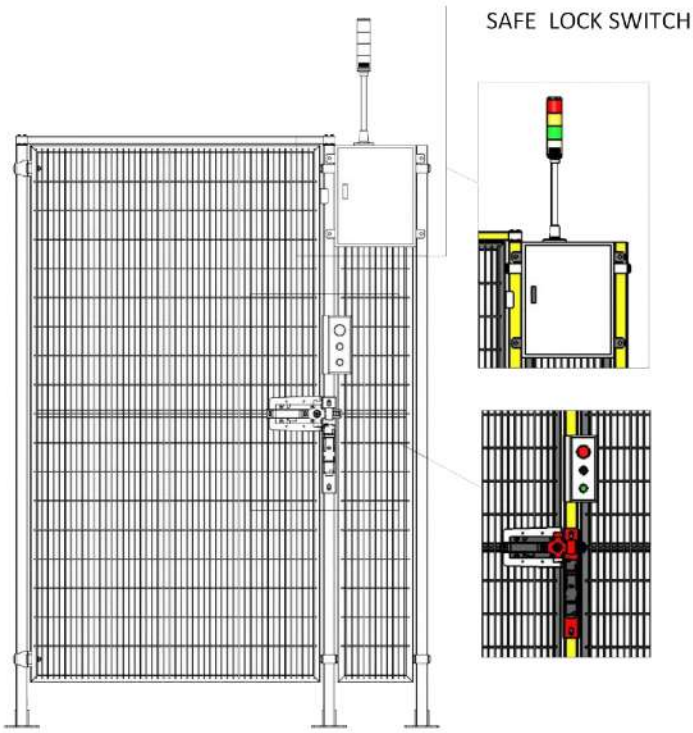

EUCHNER
More than safety.
Multifunctional Gate Box
MGBS
COMPLETE SETS MGBS-P-L.H.

KEYENCE
GS Series
สวิตช์อินเตอร์ล็อคนิรภัย

OMRON
Guard Lock
Safety-door
Switch

pizzato
Safety handle
VF AP-S
100% MADE IN ITALY

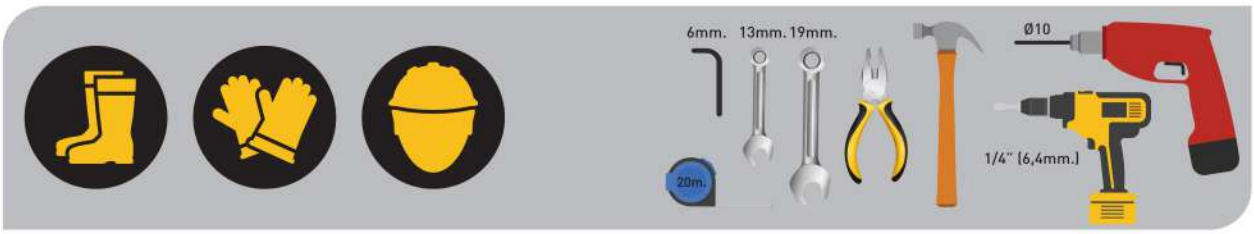

ACCESSORIES

Kit Hinge 36904990

60x40

M8x12
M8x35

M8

Kit Clamp

60x40

M8x12
M8x28

Copyright @ Thaisupport Machinery Co., Ltd. 2022. All right reserved.

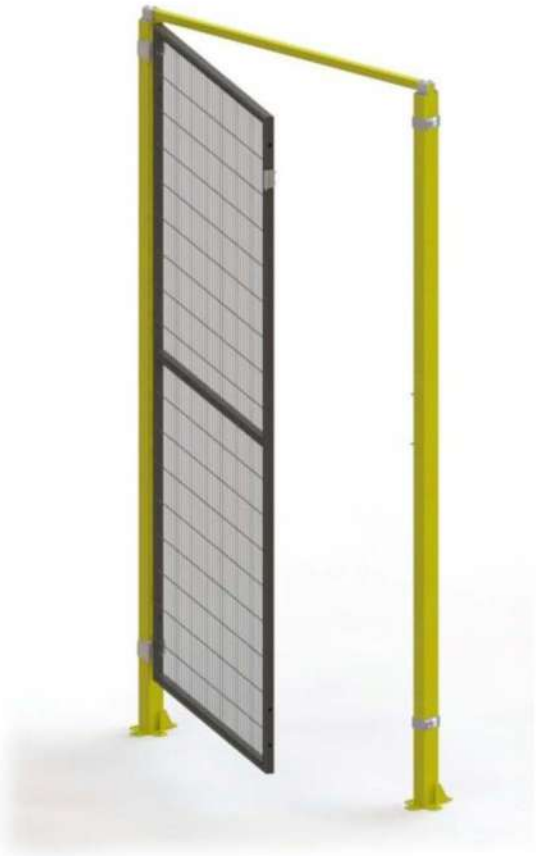

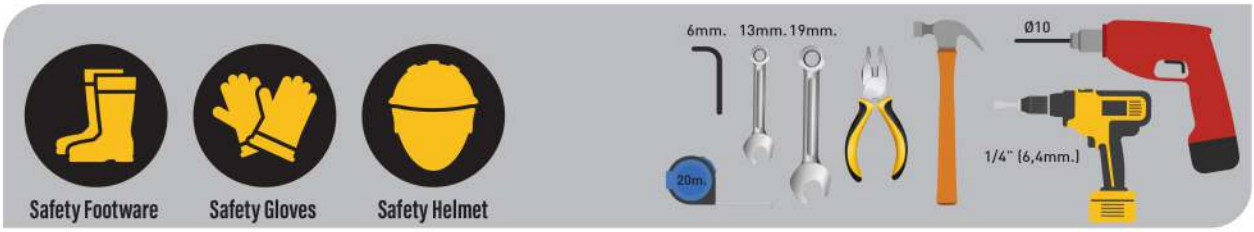

Kit Hing 36904990

X2 60x40 | X2 M8x35 | X2 M8

Kit Bracket SMF 36700074

X2 60x40

Expander

X4 M8x28

Quickdrilling screw

M10x80 | 4.2x13

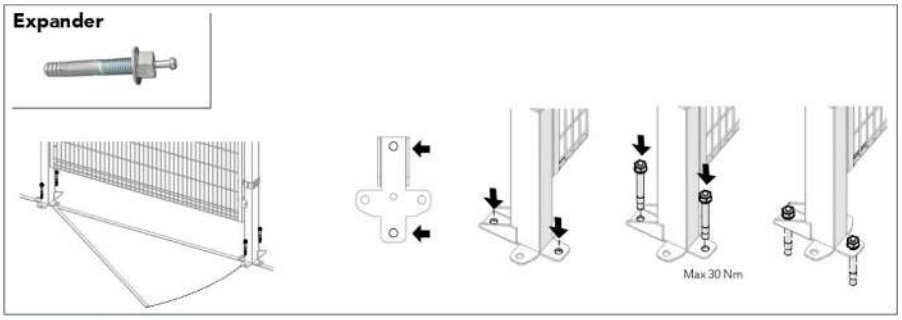

Copyright @ Thaisupport Machinery Co., Ltd. 2022. All right reserved.

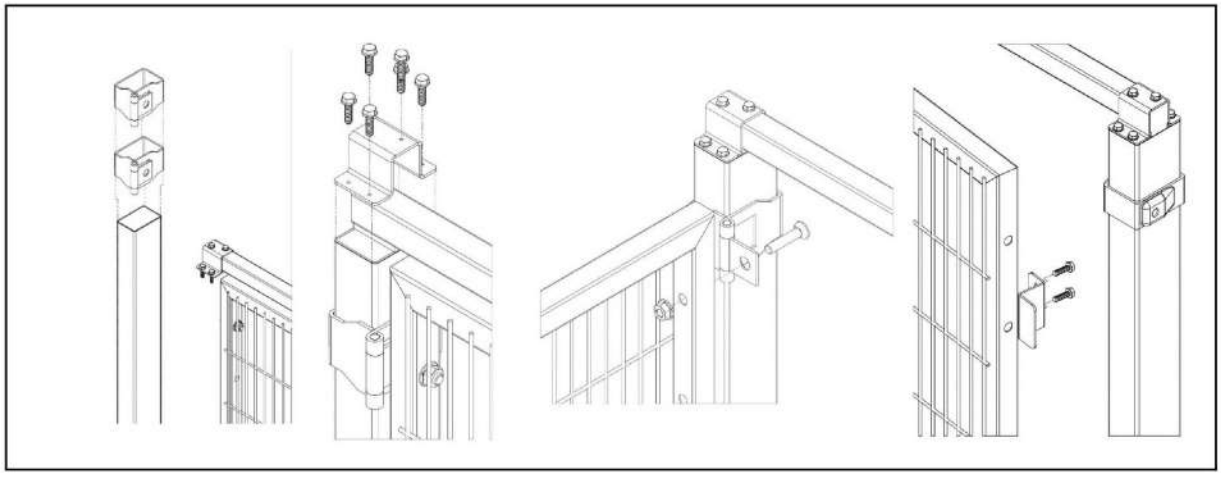

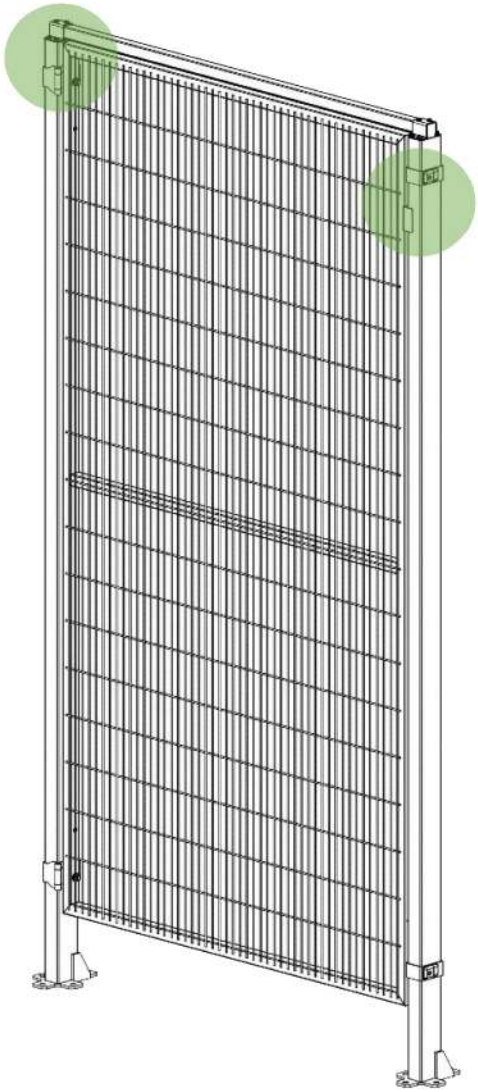

Copyright @ Thaisupport Machinery Co., Ltd. 2022. All right reserved.

SINGLE SLIDING DOOR

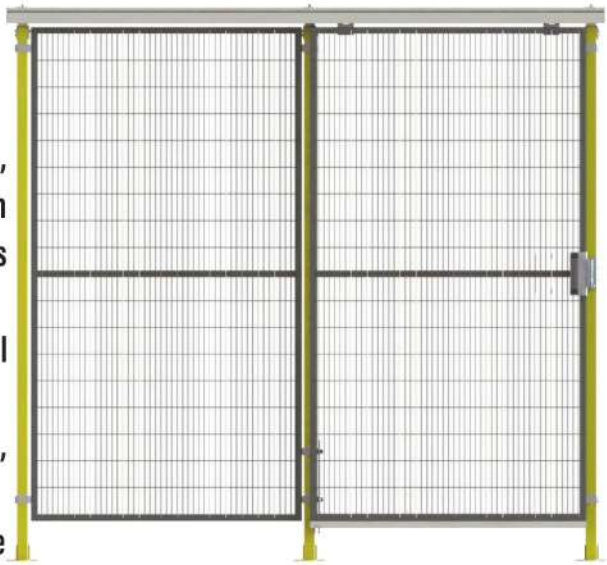

The single sliding door can be built from our mesh, polycarbonate or steel sheet panels to fit your chosen machine guard system. Use the standard panel heights 1850mm. in up to 6 widths.
You can also combine the standard panels or order special width panels to create the required door blade size.
The sliding doors are supplied with posts, panels, and door kit for assembly on site.
The door is built with an aluminum rail at the top where the runners move the door blade panel inside a single track. A guide rail at the bottom keeps the door blade in its position, making the sliding door very stable.

The standard opening width is approximately 500-1500mm.

ACCESSORIES

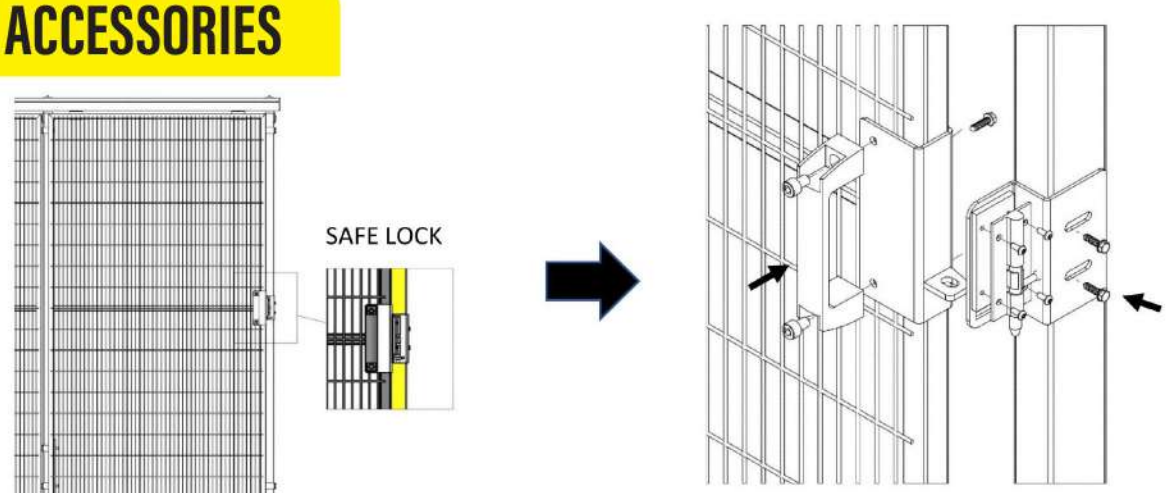

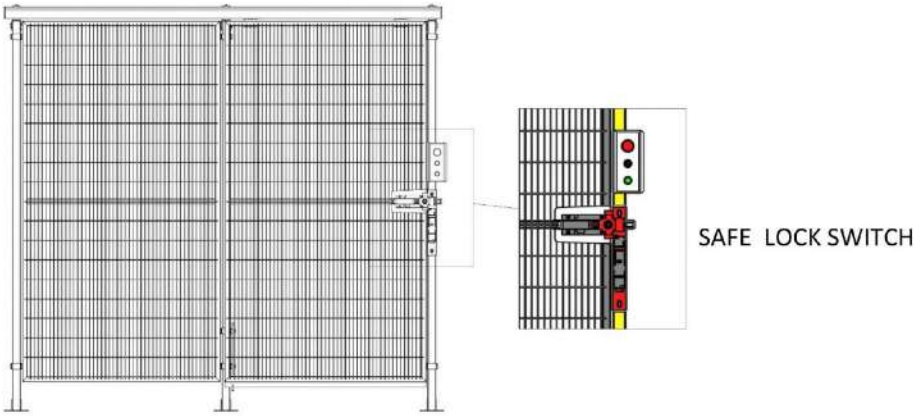

Copyright @ Thaisupport Machinery Co., Ltd. 2022. All right reserved.

ASSEMBLY INSTRUCTION

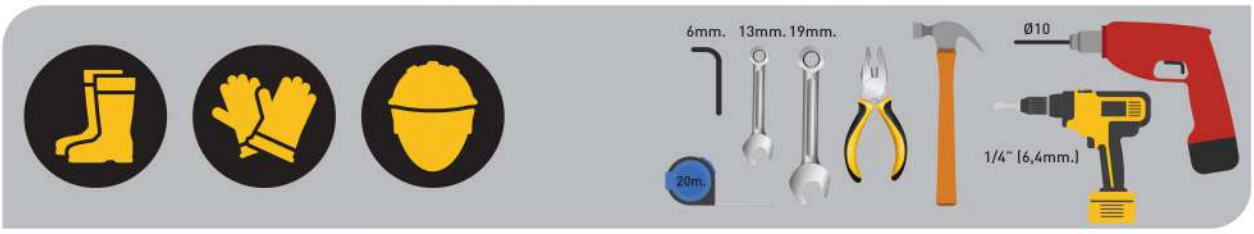

ACCESSORIES

Kit Bracket SMF 36700074

60x40

M8x12

Expander

M10x80

Quickdrilling screw

4.2x13

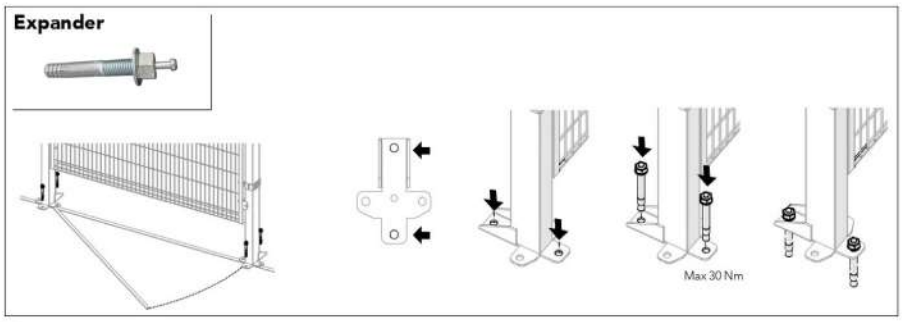

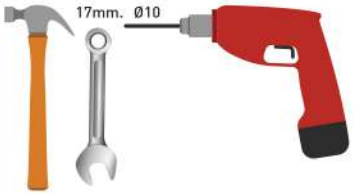

Copyright @ Thaisupport Machinery Co., Ltd. 2022. All right reserved.

ACCESSORIES

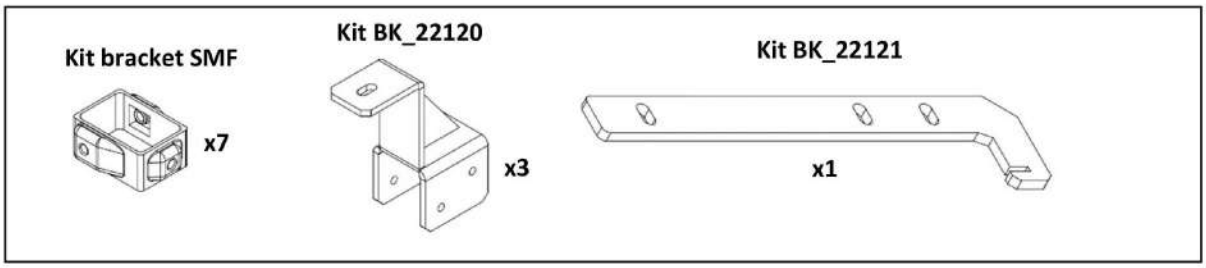

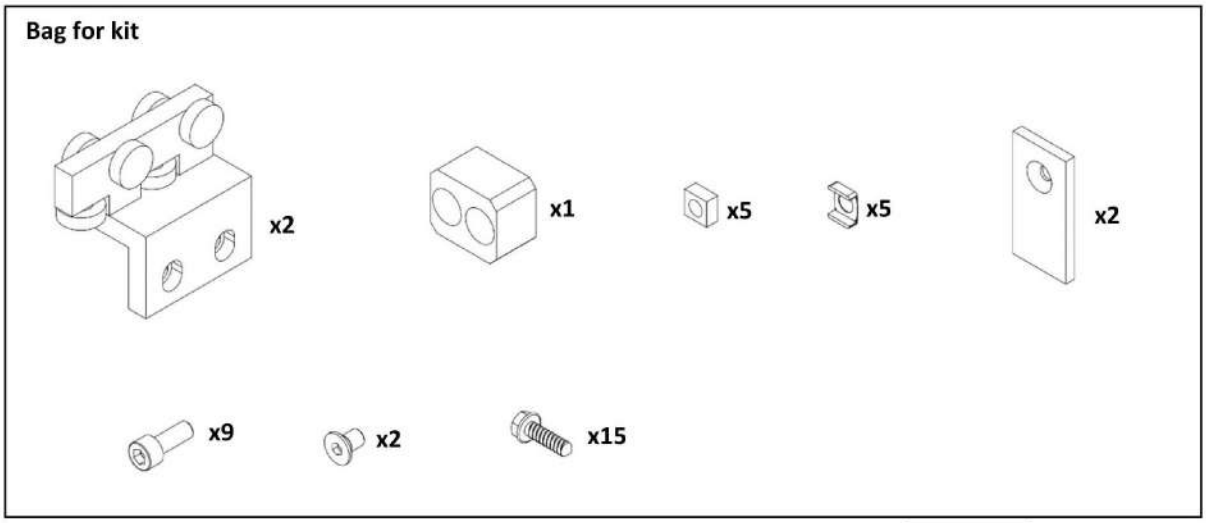

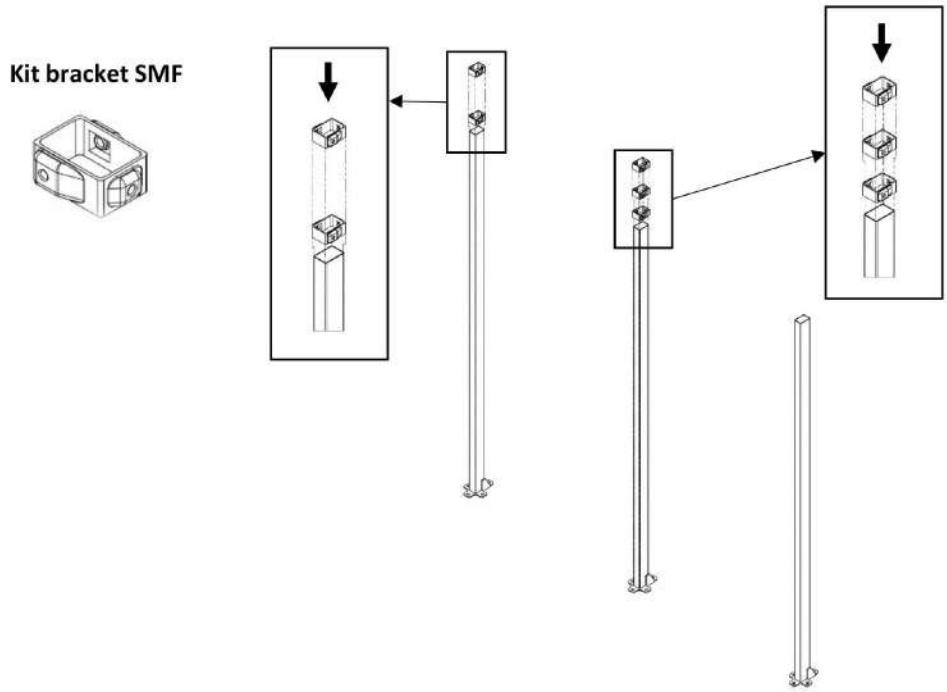

Copyright @ Thaisupport Machinery Co., Ltd. 2022. All right reserved.

ACCESSORIES

Kit BK_22121

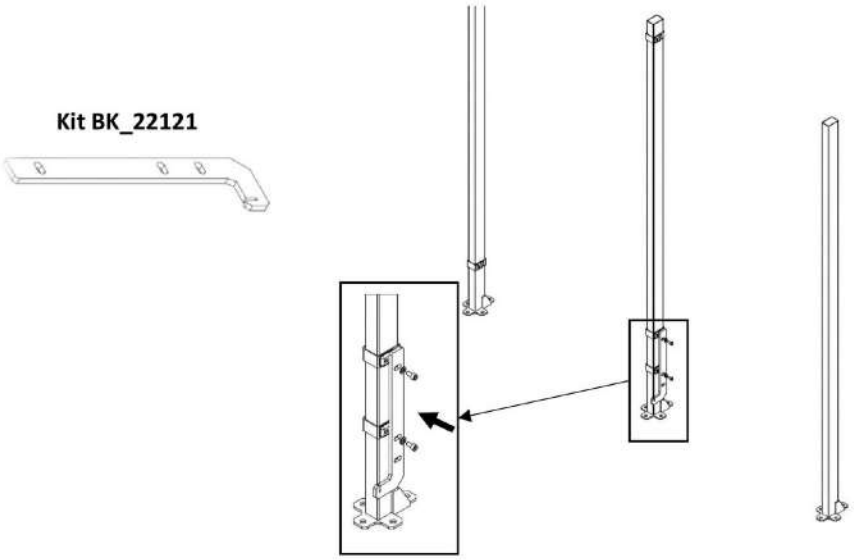

Kit BK_22120

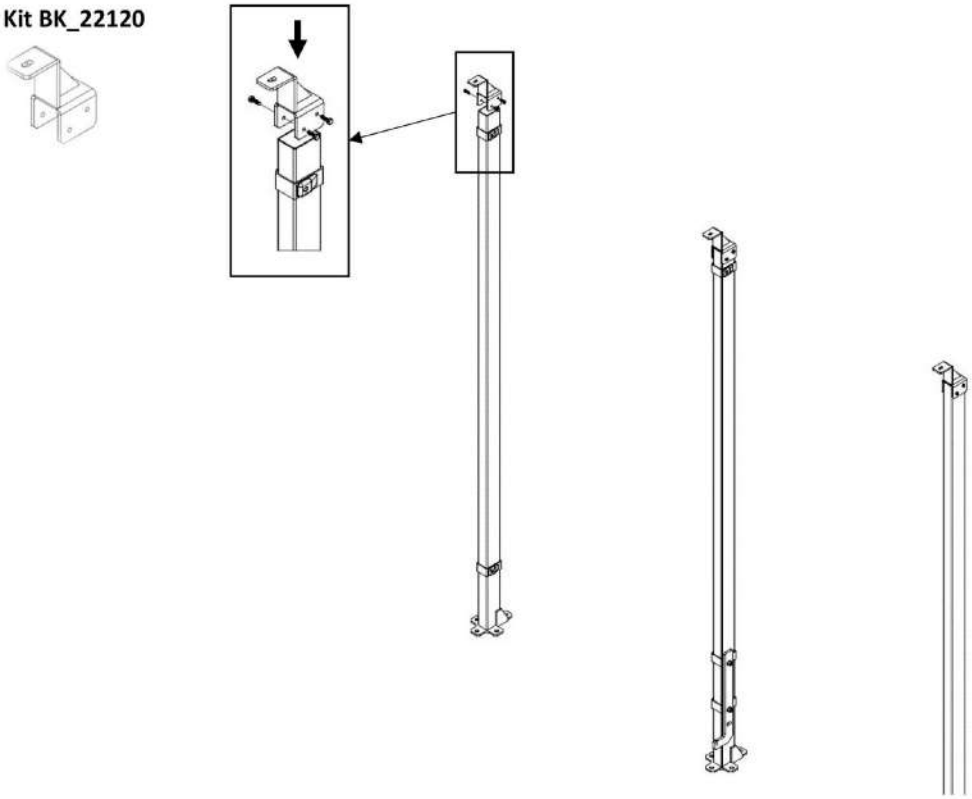

Copyright @ Thaisupport Machinery Co., Ltd. 2022. All right reserved.

ACCESSORIES

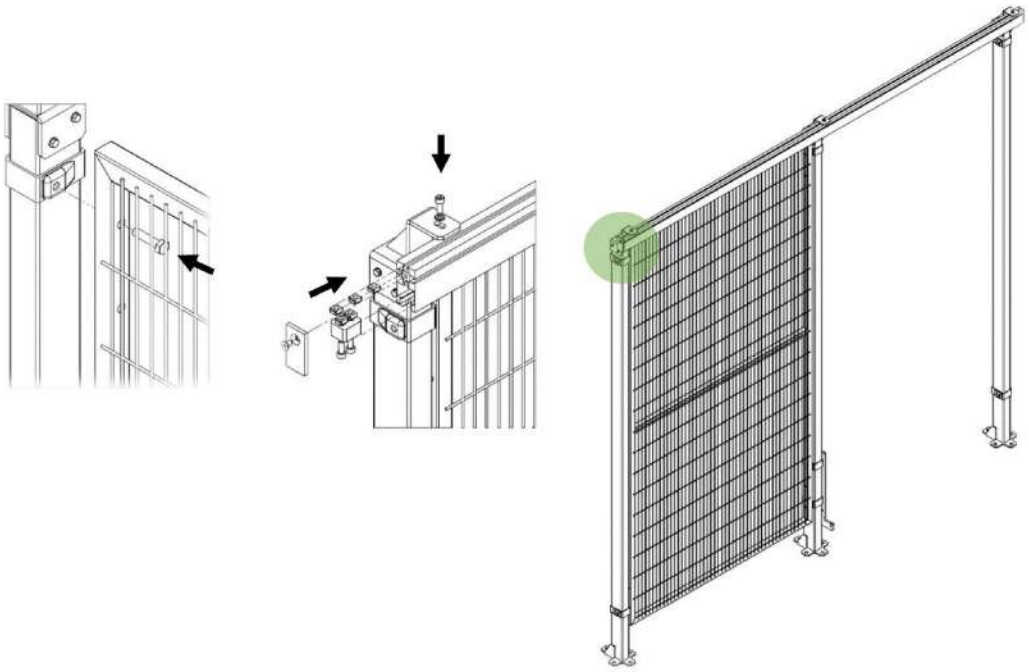

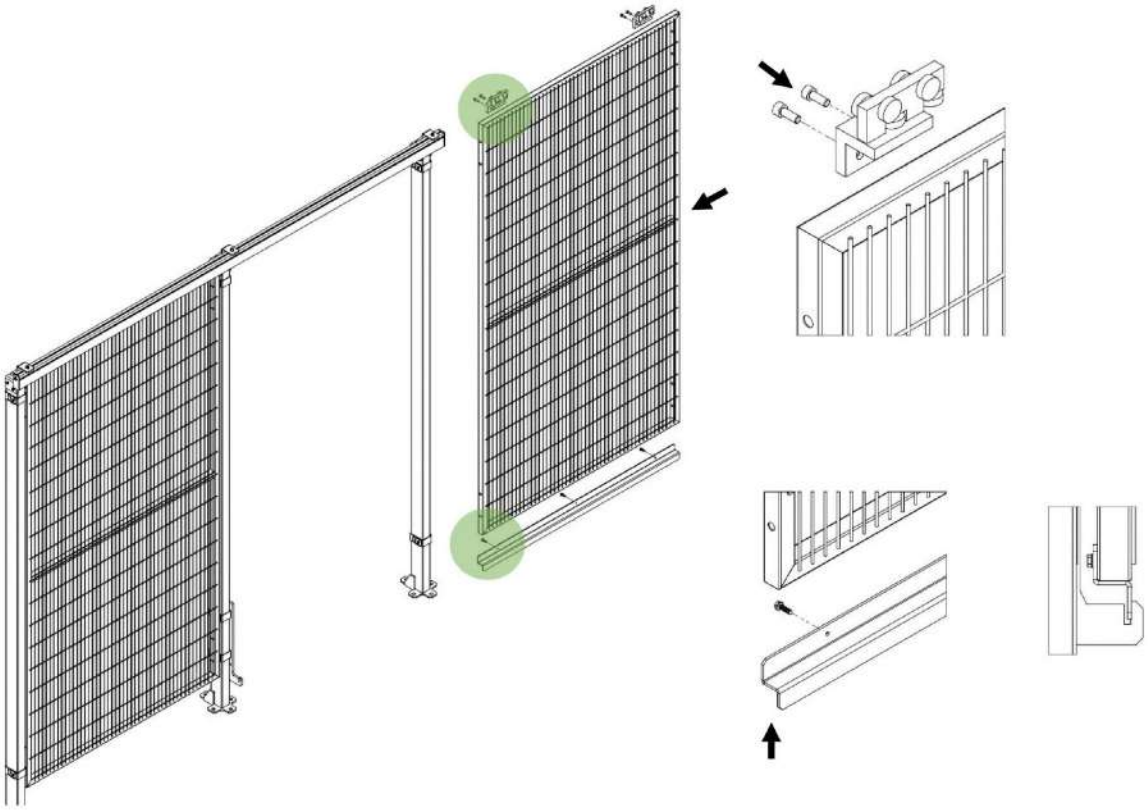

Copyright @ Thaisupport Machinery Co., Ltd. 2022. All right reserved.

PRODUCT STANDARDS

GB 23821-2009/ISO 13857.2008 4 Safety of machine --Safety distances to prevent hazard zones bing reached by upper and lower limbs

Reaching over protective structures--High risk Dimension in millimetres

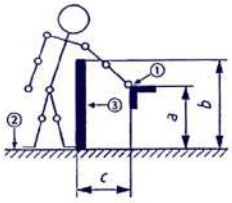

Height of hazard zone a	Height of protective structure b								
	1000	1200	1400	1600	1800	2000	2200	2400	2500
	Horizontal safety distance to hazard zone C								
2600	900	800	700	600	600	500	400	300	100
2400	1100	1000	900	800	700	600	400	300	100
2200	1300	1200	1000	900	800	600	400	300	0
2000	1400	1300	1100	900	800	600	400	0	0
1800	1500	1400	1100	900	800	600	0	0	0
1600	1500	1400	1100	900	800	500	0	0	0
1400	1500	1400	1100	900	800	0	0	0	0
1200	1500	1400	1100	900	700	0	0	0	0
1000	1500	1400	1000	800	0	0	0	0	0
800	1500	1300	900	600	0	0	0	0	0
600	1400	1300	800	0	0	0	0	0	0
400	1400	1200	400	0	0	0	0	0	0
200	1200	900	0	0	0	0	0	0	0
0	1100	500	0	0	0	0	0	0	0

a--height of hazard zone
b--height of protective structure
c--horizontal safety distance to hazard zone
1--hazard zone (nearest point)
2--reference plane
3--protective structure

Note : 1. Protective structures less than 1000mm. in height are not included because they do not sufficiently restrict movement of the body.
2. Protective structures lower than 1400mm. should not be ssed without additional safety measures.

Reaching through regular opening-Persons of 14 years of age and above Dimension in mm.

Part of body	Illustration	Opening	Sr Safety distance SR		
			Slot	Square	Round
Fingertip	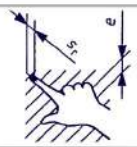	e ≤ 4	≥ 2	≥ 2	≥ 2
		4 ← e ≤ 6	≥ 10	≥ 5	≥ 5
Finger up to knuckle joint	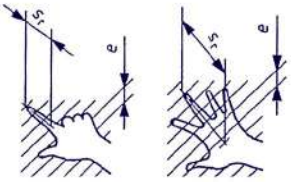	6 ← e ≤ 8	≥ 20	≥ 15	≥ 5
		8 ← e ≤ 10	≥ 80	≥ 25	≥ 20
Hand		10 ← e ≤ 12	≥ 100	≥ 80	≥ 80
		12 ← e ≤ 20	≥ 120	≥ 120	≥ 120
		20 ← e ≤ 30	≥ 850 (Note)	≥ 120	≥ 120
Arm up to junction with shoulder	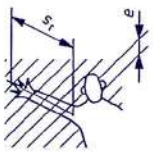	30 ← e ≤ 40	≥ 850	≥ 200	≥ 120
		40 ← e ≤ 120	≥ 850	≥ 850	≥ 850

Copyright @ Thaisupport Machinery Co., Ltd. 2022. All right reserved.

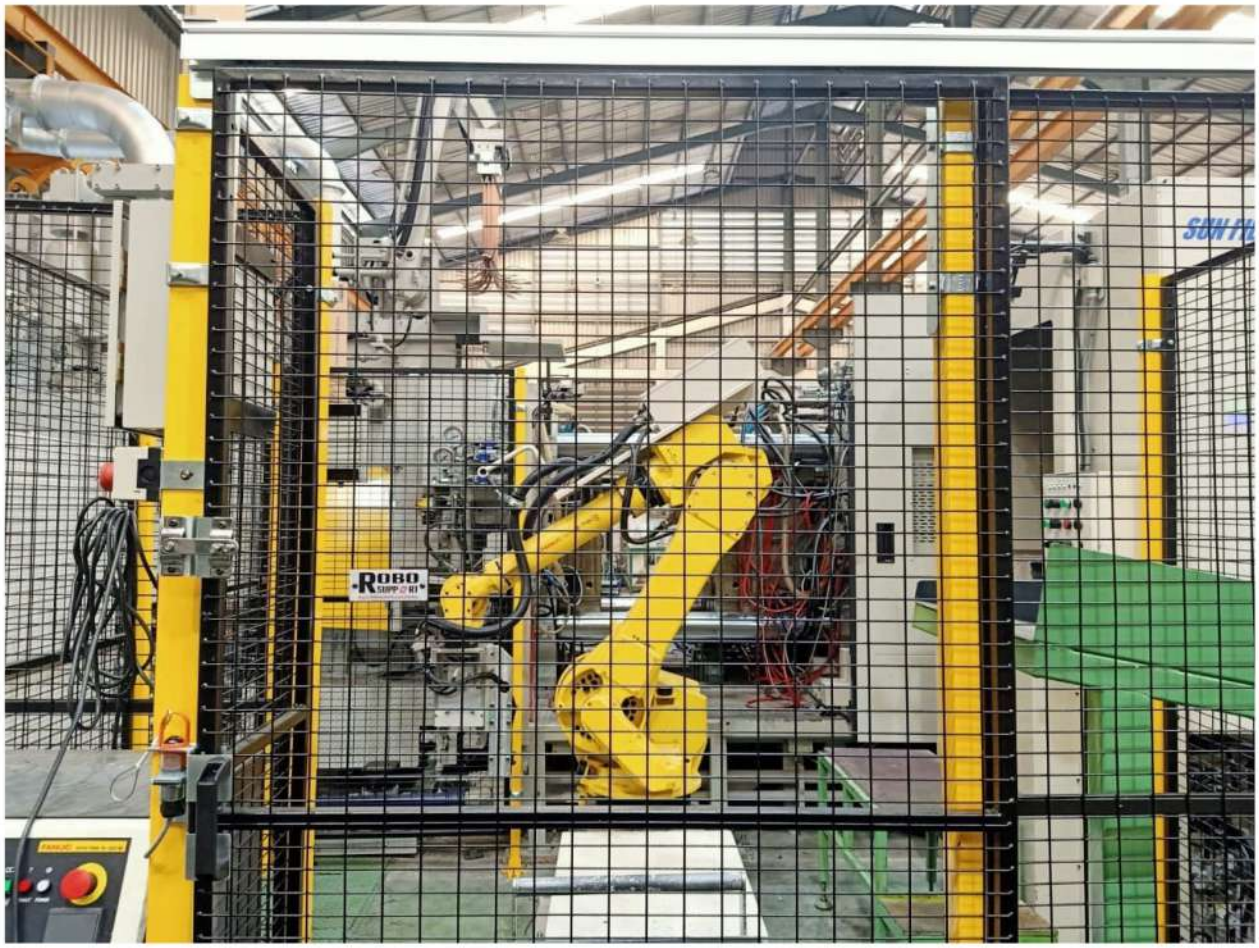

Copyright @ Thaisupport Machinery Co., Ltd. 2022. All right reserved.

Copyright @ Thaisupport Machinery Co., Ltd. 2022. All right reserved.

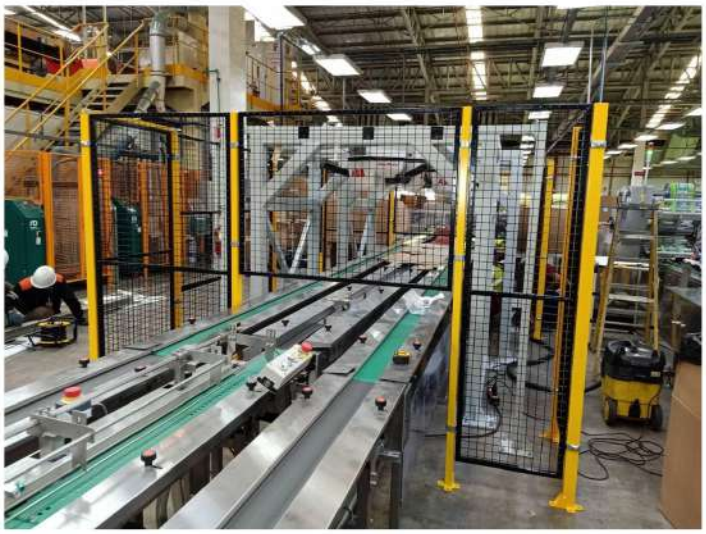

Copyright @ Thaisupport Machinery Co., Ltd. 2022. All right reserved.

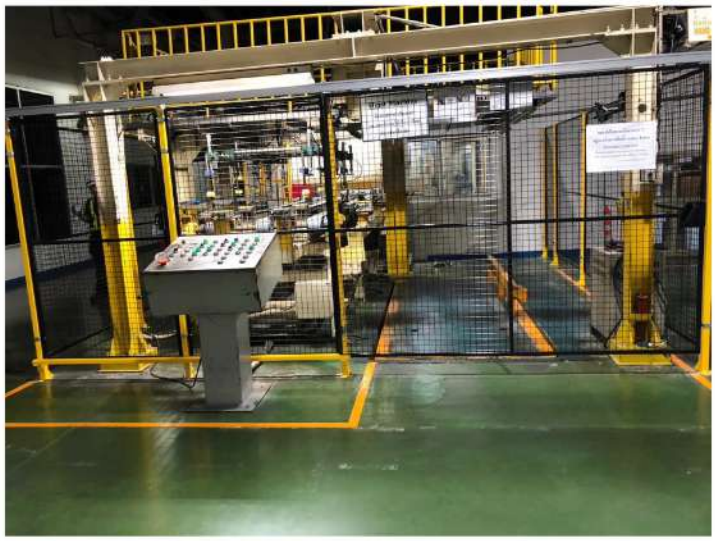

Copyright @ Thaisupport Machinery Co., Ltd. 2022. All right reserved.

Customer Refference

NIPPON STEEL
MMP CORPORATION LTD. บริษัท เอ็มเอ็มพี คอร์ปอเรชั่น จำกัด
TOSHIBA
AGC
Valmet
AkzoNobel
IME-IMEK IME REVOLUTION CO.,LTD.
EUREKA automation
P&R PRODUCELABEL & RIBBON CO.,LTD.
DYNA METAL
SCG
Hirata
DARAMIC
CJ ENGINEERING CO.,LTD.
MITSUBISHI MOTORS
Wellmatch
YUASA
CHAVANICH CO.,LTD.
PNT MACHINERY
SANOH
AAPICO
PSCI
SISTOMAT
APUNITECH Machinery design professionals
RAK ENGINEERING
Panasonic
ROBOTSYSTEM
AAS Auto Advance Service
IHI
NKE NIPPON KIKAI ENGINEERING
HASUDAI MACHINERY CO.,LTD. ハスダイマシナリー株式会社
Used Machines Importer from Japan Directly to Your Hands and Services at your site

Copyright @ Thaisupport Machinery Co., Ltd. 2022. All right reserved.